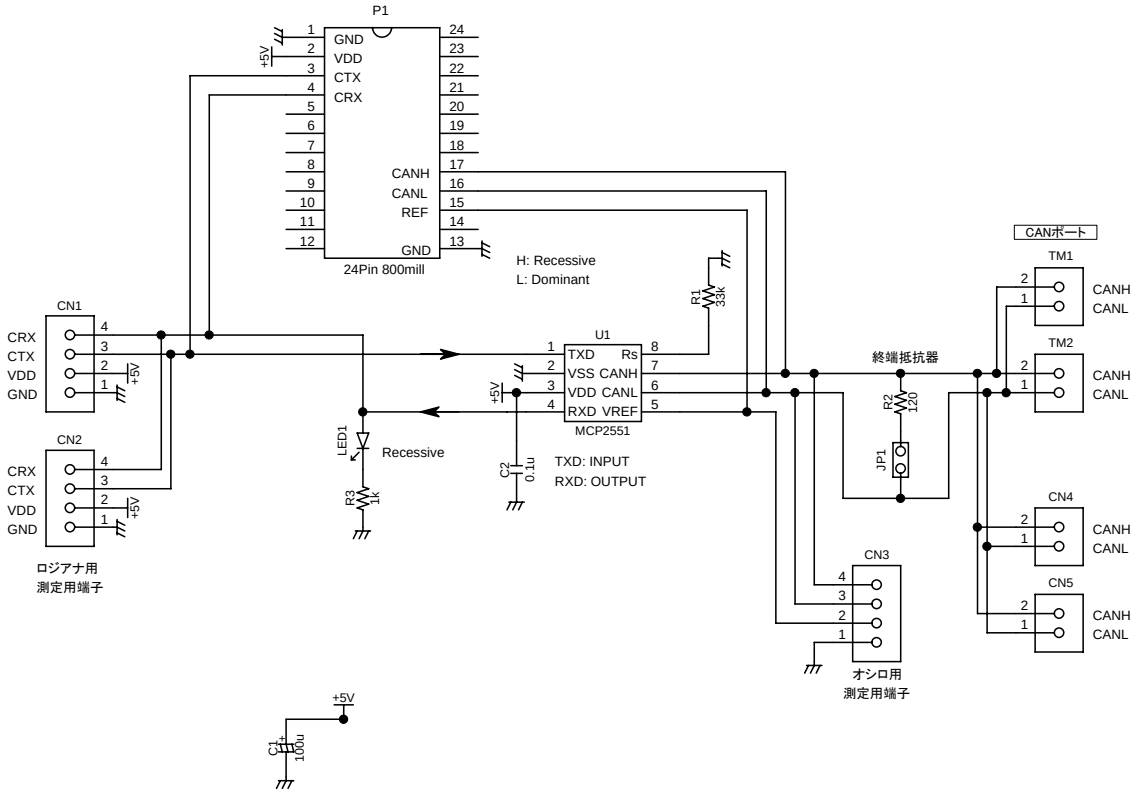

TITLE	DRAWING_No.
#227 CANトランシーバ	

SHEET	DATE	DESIGN	
/	08/12/04	T.Nakao	workshop Nak www.wsnak.com